HPBC solar panel 120W 24V

Electrical characteristics

SKU	1182120
Maximum Power (Pmax)	120Wp
Voltage at Pmax (Vmp)	36.94V
Current at Pmax (Imp)	3.25A
Open-circuit Voltage (Voc)	42.66V
Short-circuit Current (Isc)	3.44A
Temperature coefficient of Voc	-0.270%/°C
Temperature coefficient of Isc	+0.048%/°C
Temperature coefficient of Power	-0.350%/°C
Normal operating cell Temperature	45 ± 2°C
Operating Temperature	-40 ~ +85°C
Maximum System Voltage	1000 VDC
Power Tolerance	0 ~ +3%
Junction box	IP67
Bypass diodes	3 pcs
Solar Cell	Mono 60 (3 × 20)
Connection cable and connector	4mm² x 90cm, Solar Stecker (+/-)
Performance guarantee	25 years
Dimension (mm)	960 × 580 × 30
Weight (kg)	6.0



- HPBC solar cells
- 26% cell efficiency
- +3% Plus Tolerance Sorted
- reinforced aluminum frame
- TÜV Saar certified
- 25-year Product guarantee

Module diagram and characteristic curve

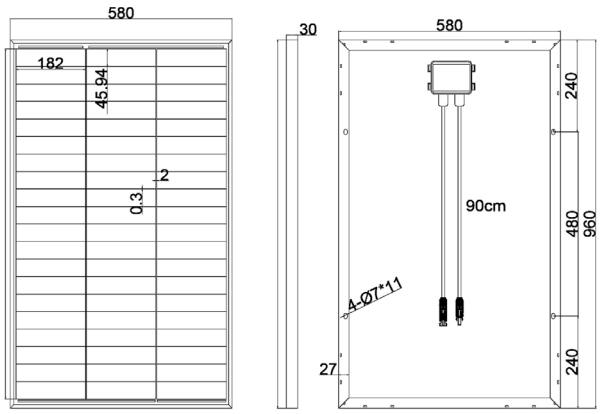

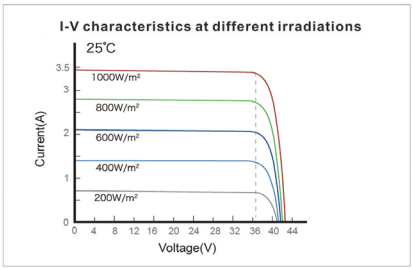

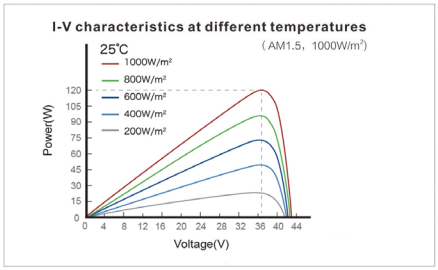

**Measured at standard test conditions: irradiance 1,000W/m², air mass 1.5 spectrum, temperature 25°C*
Electrical parameters may vary by-5% to +5%

SolarV GmbH
Am Kronberger Hang 2,65824 Schwalbach a.T
+49 (0)61969076877
info@solarv.de
www.solarv.de